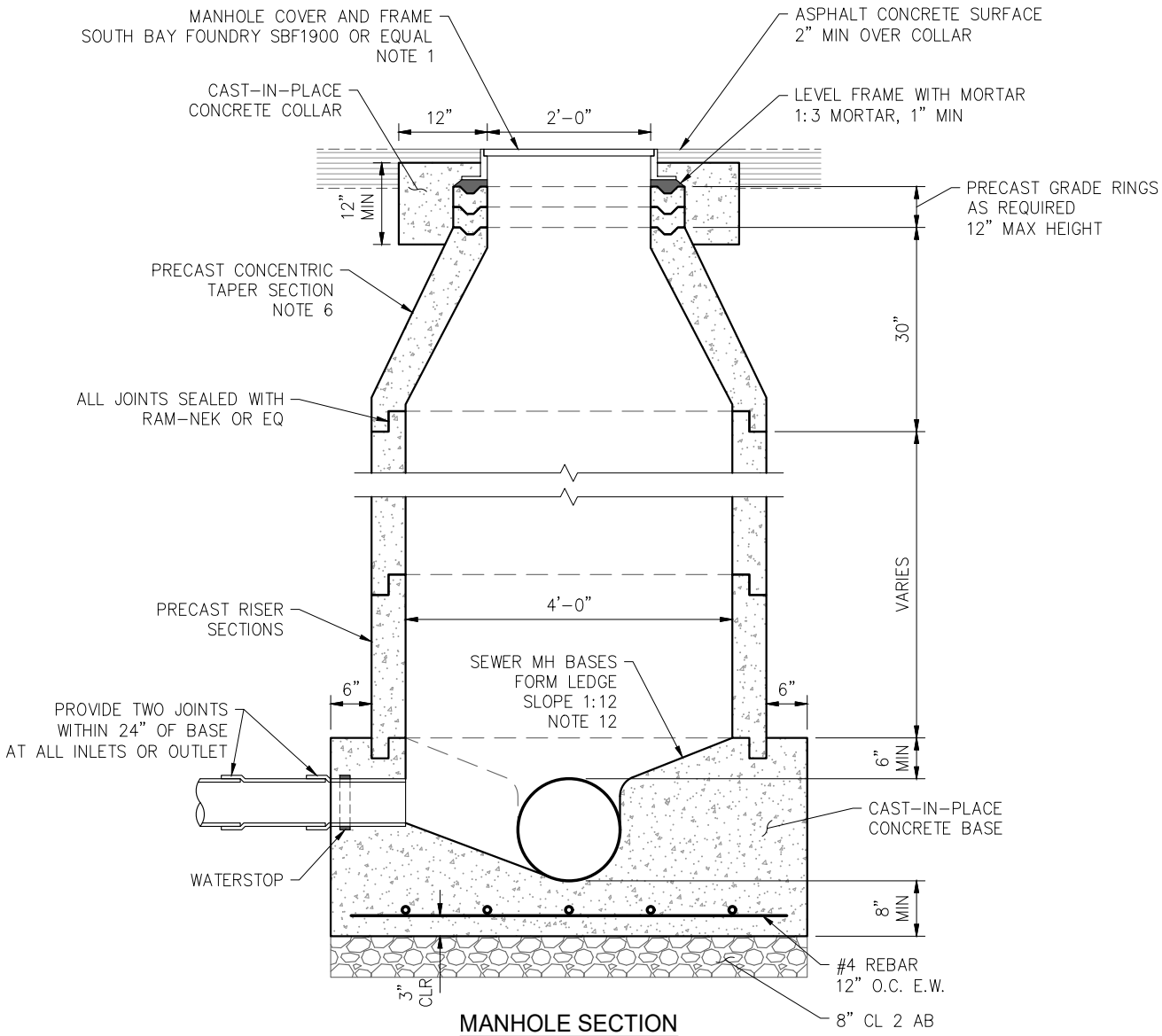

MANHOLE SECTION
(33" OR SMALLER MAINS)

NOTES:

1. MANHOLE FRAME AND COVER SHALL BE SOUTH BAY FOUNDRY MODEL SBF1900 (OR APPROVED EQUAL) IMPRINTED WITH EITHER "STORM DRAIN" OR "SANITARY SEWER" MATCHING SYSTEM MAIN TYPE. FRAME AND COVER SHALL BE FLUSH WITH EXISTING GRADE (OR FINISHED GRADE IN NEW PAVEMENTS).
2. CAST-IN-PLACE CONCRETE COLLAR AND BASE SHALL BE CLASS A 6-SACK PER CALTRANS STANDARDS PLACED AGAINST UNDISTURBED EARTH OR APPROVED BACKFILL MATERIAL AT 95% COMPACTION.
3. FRAME AND BASE SHALL BE SET TO THE PRECAST SECTIONS WITH 1:3 MORTAR MIX.
4. WHEN INSTALLED IN PAVED STREETS, A MINIMUM 2" ASPHALT CONCRETE LAYER SHALL BE PLACED ABOVE THE CONCRETE COLLAR AND FLUSH WITH THE EXISTING GRADE (OR FINISHED GRADE ON NEW STREETS). TACK COAT ALL SURFACES PRIOR TO PLACING ASPHALT CONCRETE.
5. PRECAST SECTIONS SHALL CONFORM TO ASTM C-478 SPECIFICATIONS.
6. PRECAST CONCENTRIC TAPER SECTION SHALL BE USED.
7. ALL JOINTS SHALL BE SEALED WITH RAM-NEK OR APPROVED EQUAL.
8. WATERSTOPS SHALL BE PROVIDED ON ALL INLET AND OUTLET PIPE ENTRY POINTS. WATERSTOPS SHALL BE A-LOK, KORE-N-SEAL, OR APPROVED EQUAL WITH GROUT AROUND WATERSTOP.
9. ALL MANHOLES SHALL PROVIDE A MINIMUM 0.10' DROP ACROSS THE MANHOLE.
10. SOFFIT ELEVATION OF ALL INLET PIPES SHALL SHALL BE NO LESS THAN THE SOFFIT ELEVATION OF THE OUTLET PIPE, EXCEPT FOR OVERFLOW OUTLETS.
11. CAST-IN-PLACE RISER AND CONES MAY BE ALLOWED WHEN COMPLIANT WITH CALTRANS STANDARDS.
12. CHANNELIZE BASE ONLY FOR SANITARY SEWER MANHOLES. SEE CITY DETAIL U-3B FOR PLAN.

SOUTH SAN FRANCISCO PUBLIC WORKS ENGINEERING	**MANHOLE SECTION (UP TO 33-INCH)**	**APR 2023** **U-3A**