DEPARTMENT OF ECONOMIC
AND COMMUNITY DEVELOPMENT
BUILDING DIVISION

SKYLIGHT INSTALLATIONS

Residential

REQUIREMENTS FOR PLAN SUBMITTAL

The following items shall be required in order to process a Building Permit.

Please submit three (3) complete sets of plans, drawn to scale on substantial paper, minimum size 18" x 24". Plans are to include:

1. **Roof Framing Plan** – Show roof pitch, rafter size, spacing, and location of new skylight. (see back).

2. **Framing Details** – If the existing framing is altered, provide framing details (see back). If the roof sheathing to ceiling exceeds 24" a shaft detail will be required.

3. Provide the ICC report or other manufacture listing.

4. All skylights shall be dual glazed.

5. Minimum 4-inch curbs required with minimum 26 gage metal flashing and counter flashing or approved manufactures curb.

***NOTE:** No cutting of engineered trusses is allowed, without details and calculations from a structural engineer.

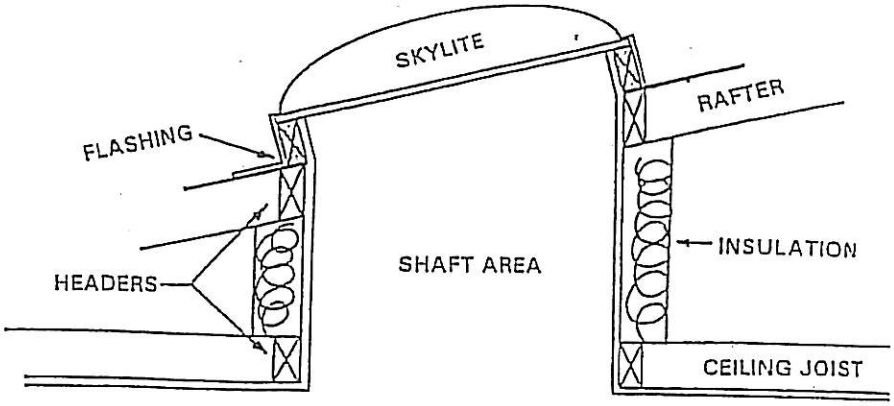

SHAFT SECTION

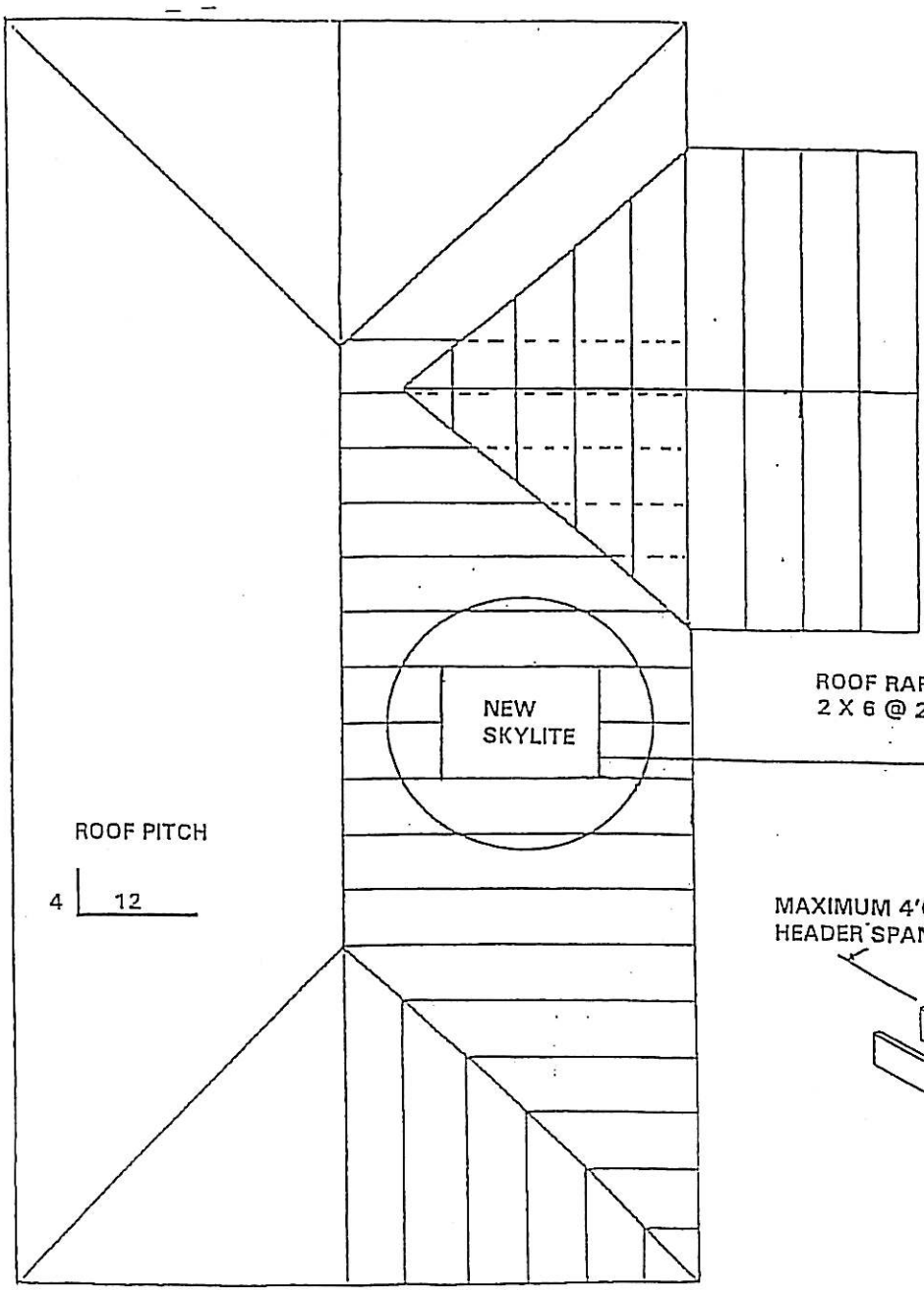

ROOF PLAN

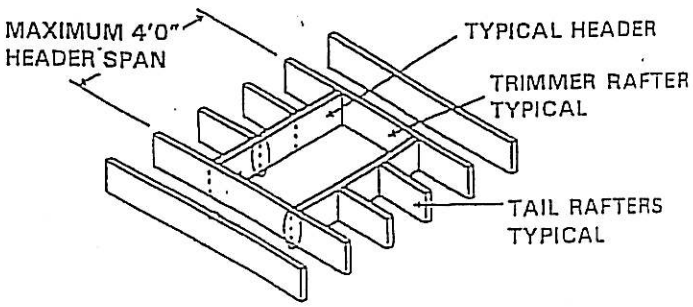

TYPICAL HEADOUT