DEPARTMENT OF ECONOMIC AND COMMUNITY DEVELOPMENT
BUILDING DIVISION

STAIR/PORCH REPAIR

SINGLE FAMILY RESIDENCE

GUARDRAILS:

Stairways, landings, ramps, balconies and porches that are more than 30" above grade require a guardrail.

HEIGHT: The height of the guardrail shall be a minimum of 42".

OPENINGS: Openings or spaces shall be apart so that a 4" diameter sphere **cannot** pass through.

The triangular opening formed by the riser, tread and bottom of the guardrail **shall not** allow a 6" sphere to pass through.

STAIRWAYS (please see back):

Stairways having two or more risers.

Width: The minimum stairway width is 36". Handrails may project into this width a maximum of 3 ½" from each side. The stringers, trim and the like may project into this width a maximum of 1 ½" from each side.

Rise and Run: The rise **shall not** be less than 4 inches or greater than 7 ¾ inches. The run **shall not** be less than 10 inches. There **shall not** be more than 3/8 inch variation between the smallest and greatest height in risers within any flight of stairs. There **shall not** be more than 3/8 inch variation between the largest treat run and the smallest one within any flight of stairs.

Exterior stairways **shall not** project into yards where openings are not permitted or protection of openings is required.

Enclosed usable space under stairs **shall** have the walls and soffits protected on the enclosed side as required of one hour construction.

HANDRAILS:

The handrails **shall** be placed not less than 34 inches or more than 38 inches above the nosing of the tread or landing. They **shall** be continuous the full length of the stairs and the ends **shall** be returned or terminate in a newel post.

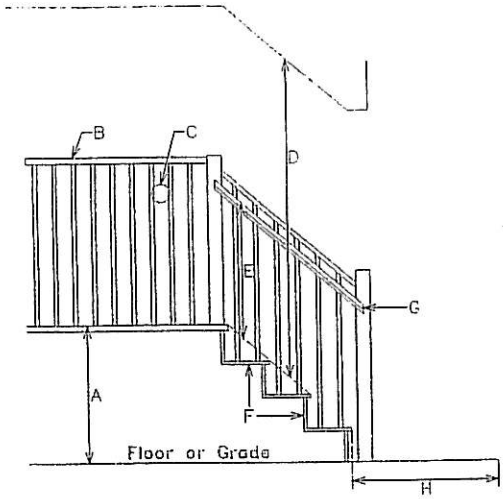

Handrail must Return to Wall or End at Post
No Projecting Ends

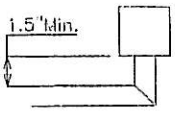

3/4" to 1 1/4" Nosing Required unless Open Risers or over 11" Treads

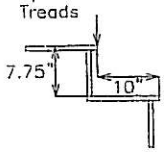

A. Guards required if over 30", 12 Ft. Max. between Landings
B. Guard or Guardrail Min. 42" at Landing
C. Intermediate pattern such that a Sphere 4" cannot pass through
D. Min. 6'8" Headroom Clearance
E. Handrails 34"to 38" measured from the nosing of the tread with a grippable cross section area of 1.25" to 2"
F. Rise and Run; 7.75" Rise Maximum and 10" Run Minimum
G. Handrails shall be continuous the full length of the stairs and must Return to Wall or Newel Post
H. 3' Minimum Landing at top and bottom

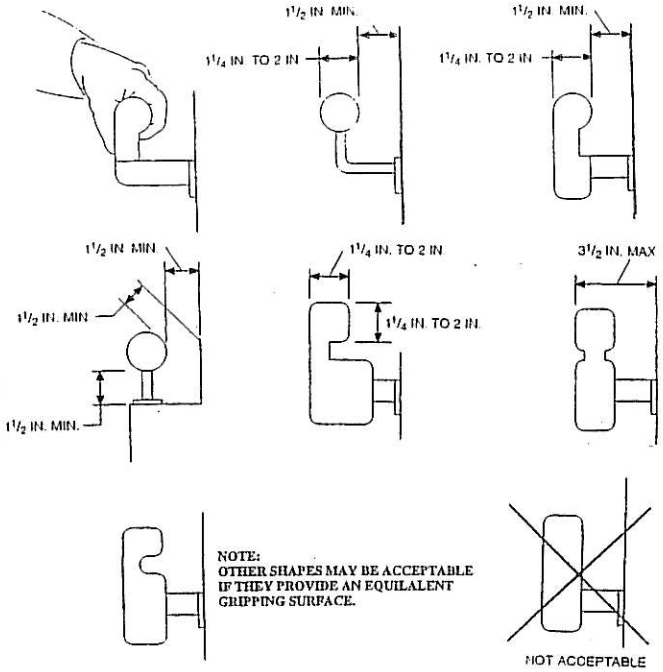

ACCEPTABLE SHAPES AND INSTALLATIONS--HANDRAIL

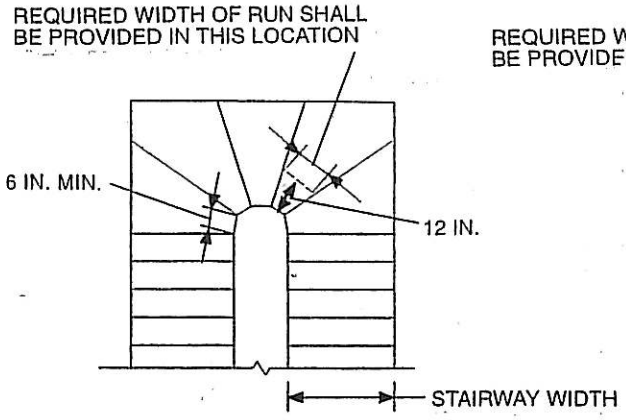

PLAN VIEW

ALTERNATE USE OF WINDERS

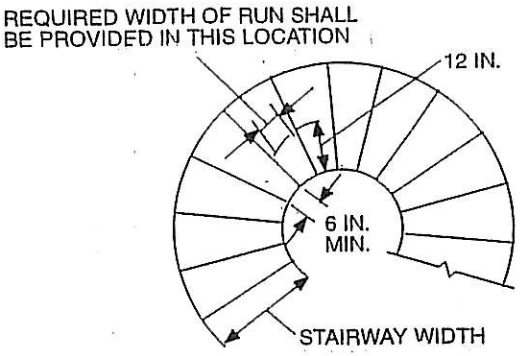

PLAN VIEW

WINDING STAIRWAY

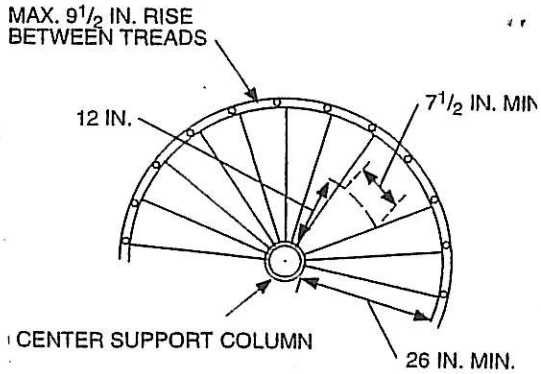

LIMITATIONS:

1. ONLY APPLIES TO R-3 OCCUPANCY AND PRIVATE STAIRWAYS IN R-1 OCCUPANCIES.
2. LIMITED TO SERVING AS EXIT FOR 400 SQUARE FEET MAXIMUM.

PLAN VIEW

SPIRAL STAIRWAY

THE LARGEST RISER HEIGHT WITHIN ANY FLIGHT OF STAIRS SHALL NOT EXCEED THE SMALLEST BY MORE THAN 3/8 IN.

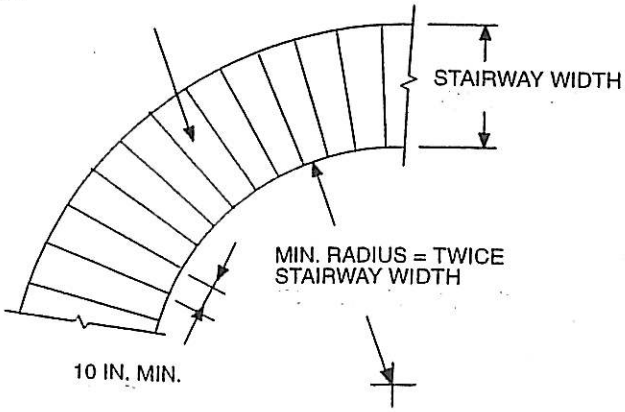

PLAN VIEW

CIRCULAR STAIRWAY

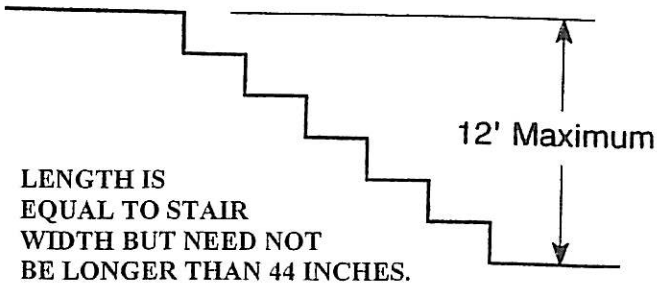

LENGTH IS EQUAL TO STAIR WIDTH BUT NEED NOT BE LONGER THAN 44 INCHES. NOT MORE THAN 12 FEET VERTICALLY BETWEEN LANDINGS.

LANDINGS